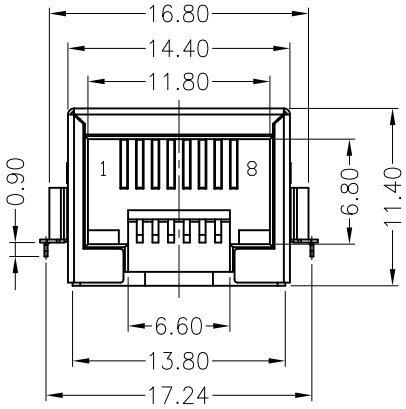

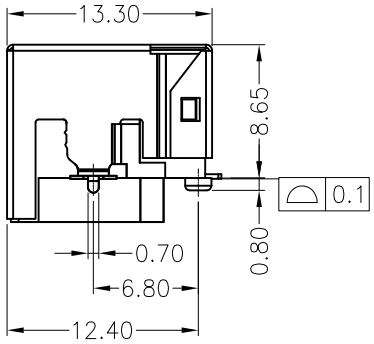

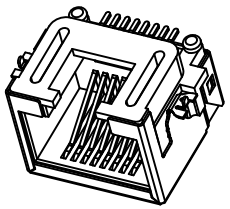

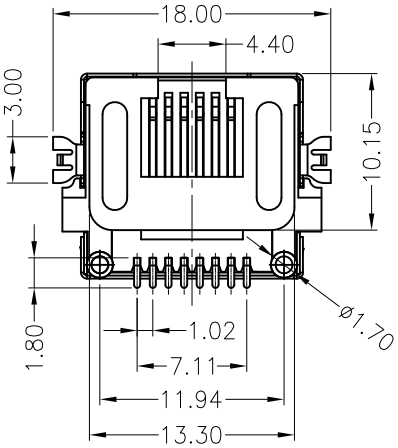

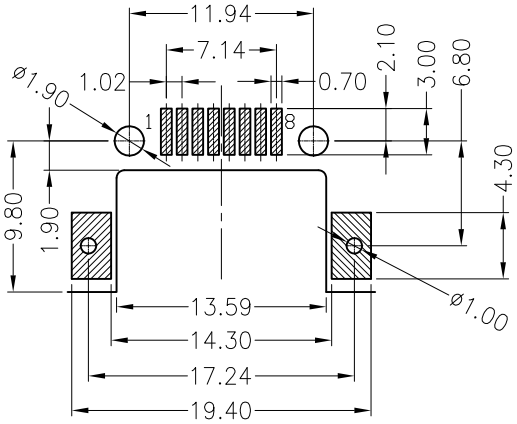

Recommend PCB Layout
(Jack Top View)
Tolerance: ±0.05mm

NOTES:
1.MATERIAL:
HOUSING:LCP UL94V-0 Black
CONTACT:PHOSPHOR BORNZE
SHELL:C2680
2.FINISHED:
CONTACT:50u"MIN. NICKEL UNDERPLATING ALL AREA,
100u"MIN. TIN ON SOLDERTAILS, PLATED WITH 1U'
GOLD IN CONTACT AREA
SHELL:30u"MIN. NICKEL PRE-PLATING ALL AREA
3.JACK CAVITY CONFORMS TO FCC RULES AND
REGULATIONS PART 68, SUBPART F

4.SPECIFICATIONS:
1. VOLTAGE: 150V AC RMS
2. CURRENT RATING: 1.5A
3. CONTACT RESISTANCE: 40MΩMAX
4. INSULATION RESISTANCE: 500MΩMIN
5. DIELECTRIC WITHSTANG VOLTAGE :1000V AC
6. OPERATURE TEMPERATURE: -40° C~80° C
7. DURABILITY: 500 MATING CYCLES MIN.

REV.	ECN. NO.	DRAWN	DATE
A	NEW	Cary	05/07/2014

ECONN Technology
ECONN corporation

HSF Compliant

ⓧ:QUALITY CONTROL ITEM		GENERAL TOLERANCE .X± 0.38 X.°± 2° .XX± 0.25 .X°± 1° .XXX± 0.13	PART NO.: WRB-S4F0-3180
APPROVED			TITLE: RJ45 沉板式 8P8C SMT,CONNECTOR W/O LED, ,Shielded, Thru-Hole
CHECKED			
DRAWN		UNIT: mm	SCALE: 1:1 / SHEET: 1/1 / REV.: A

SIZE: A4

DOCUMENT NO. : ZER0013/A.1