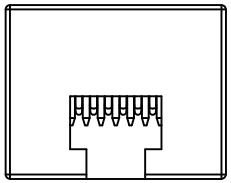

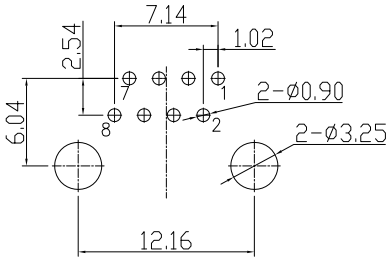

Recommend PCB Layout
(Jack Top View)
Tolerance: ±0.05mm
Recommend PCB Thickness: 1.6mm

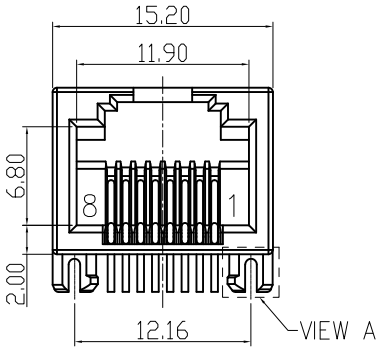

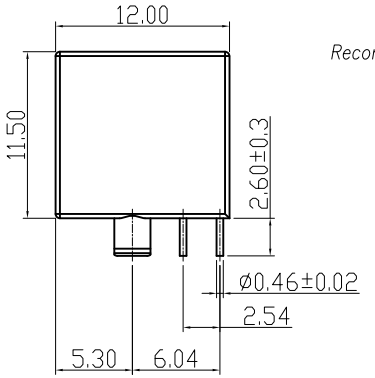

SPECIFICATION
1. VOLTAGE RATING: 150 VAC RMS.
2. CURRENT RATING: 1.5 AMP
3. CONTACT RESISTANCE: 40 mΩ MAX
4. INSULATION RESISTANCE: 500MΩ MIN.
5. WITHSTAND VOLTAGE: AC1000V RMS 60s.
6. OPERATING TEMPERATURE: −40°C~+80°C

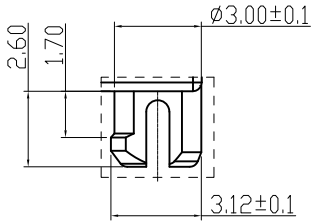

VIEW A
SCALE 2:1

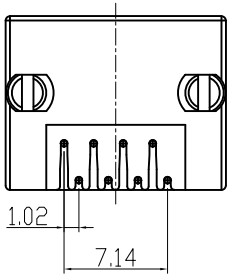

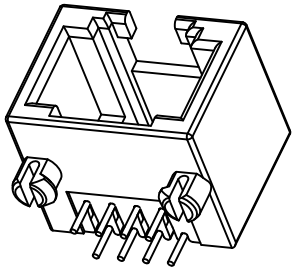

PART NUMBER:
JT1BW-0 0 B 1 - 0 0 E M

- Housing PBT Blue
- LED Code W/O LED
- Contact PIN 2.60mm
- Gold Plated 0.4U MIN"

NO.	PART NAME	Q'TY	MATERIAL	PLATING & COLOR	Remark
b	TERMINAL	8	PHOSPHOR BRONZE ø0.46mm	Au PALTING 0.4U" min	
a	HOUSING	1	PBT 藍色有卤 UL94V-0	Blue 2143C	

REV.	ECN. NO.	DRAWN	DATE	EC.content
A.0	NEW	Candy	09/08/2022	–

ECONN Technology
ECONN corporation
HSF Compliant

Ⓧ:QUALITY CONTROL ITEM
APPROVED
CHECKED
DRAWN

GENERAL TOLERANCE
.X± 0.38 X.°± 2°
.XX± 0.25 .X°± 1°
.XXX± 0.13

PART NO.: JT1BW-00B1-00EM
TITLE: RJ45 8P8C全塑1X1 PBT蓝色有卤

UNIT: mm | SCALE: 1:1 | SHEET: 1/1 | REV.: A.0

SIZE: A4

說明: △: 備註 ◇: 版本變更 Ⓝ: 尺寸序號 ■: 重點尺寸 ▼: CPK尺寸

DOCUMENT NO. : ZER0013/A.3